Classic™

4" Centerset Lavatory Faucet

LF-WL2-230C Finish*(C)* ❑
LF-WL2-230K Finish*(K)* ❑

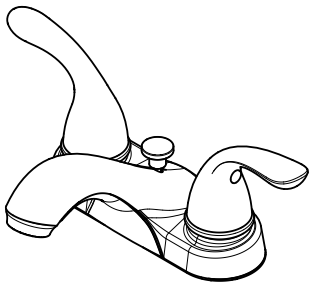

- Two-Handle
- 3-Hole Installation
- Washerless Valves

Specifications

Features

- 1.2 GPM Flow Rate
- Mounting Hardware Included
- Mounting Posts Included
- Pop-Up Drain Included
- Pforever Warranty®

Code Compliance

Pfister products are designed and manufactured in compliance with the following standards and codes:

- IAPMO Certified to ASME A112.18.1/CSA B125.1
- EPA WaterSense Certified
- NSF/ANSI/CAN61:Q≤1
- CEC Certified/CALGreen compliant
- ADA Compliant – ANSI A117.1 (Lever Handles Only)

Dimensions

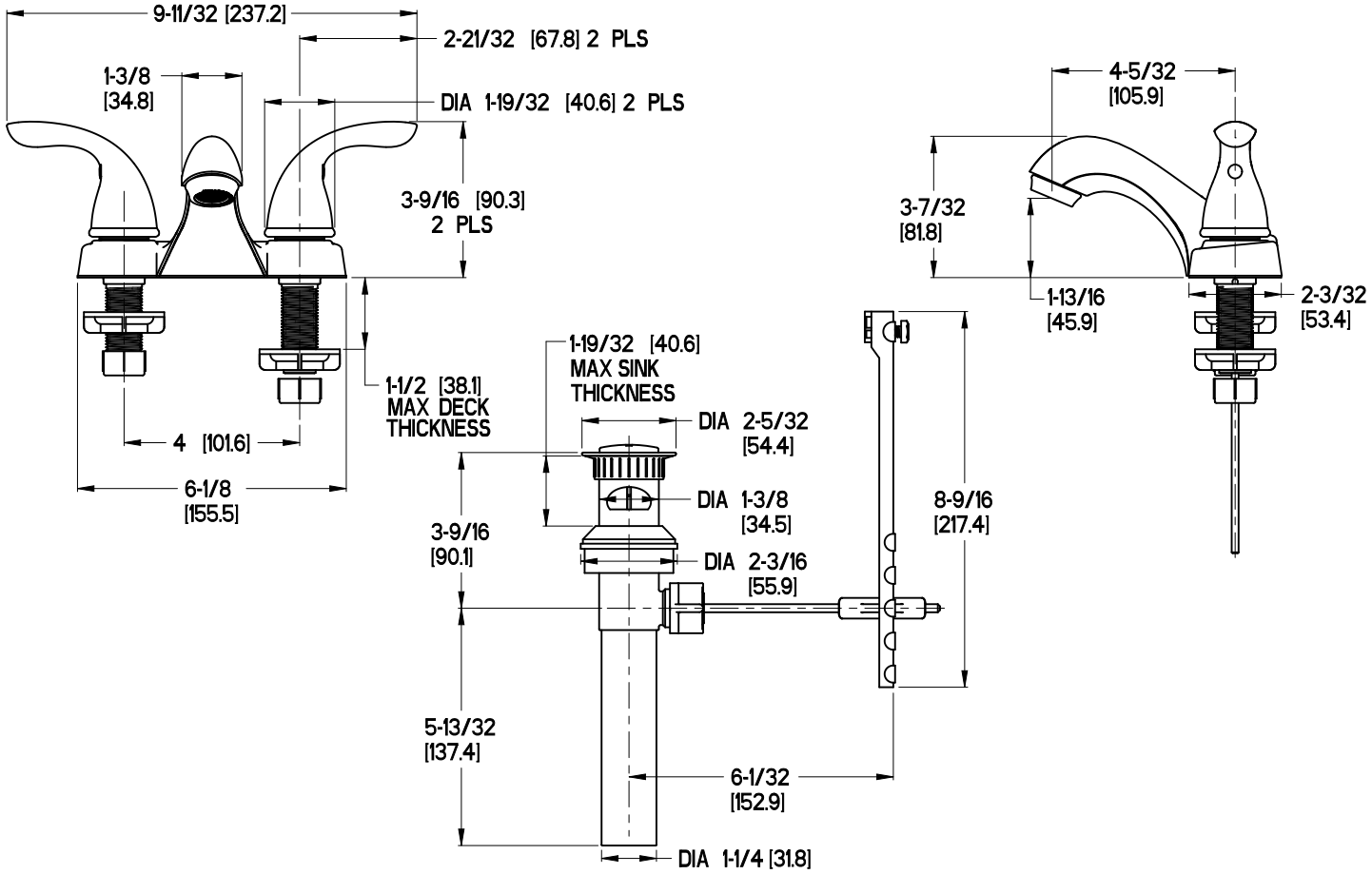

Ø1 Min to Ø1-1/2 Max. Deck Hole Openings

Copyright © 2022, Pfister Inc.